(1:1)

(LW004) x 1

PS054 x 1

LR030 x 1

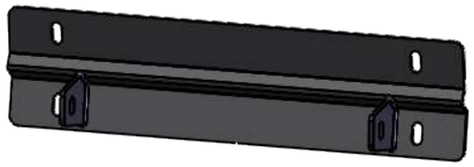
(LW007) x 1

PS056 x 2

LR009 x 2

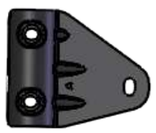
LR005 x 2

LR006 x 2

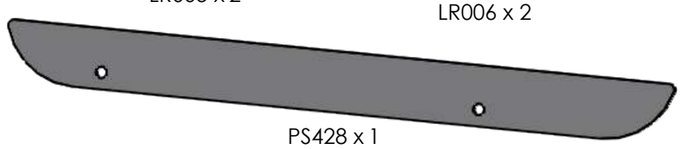
PS428 x 1

PS425 x 2

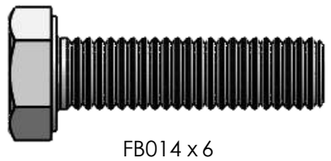
FB014 x 6

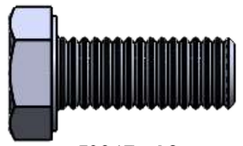
FS067 x 12

FW021 x 28

FN080 x 10

PS414 x 18

PS065 x 4

PS419 x12

M8 x 100 (FS024) x 2

LR031 x 2

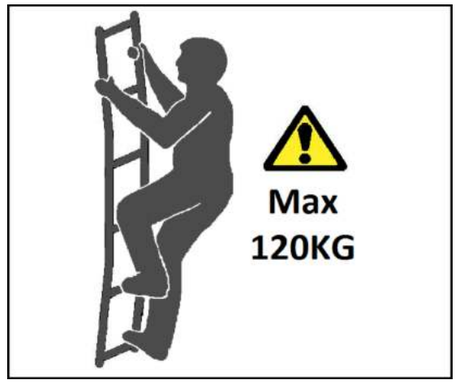

13mm x 2

4mm x 1

9mm x 1

13mm x 1

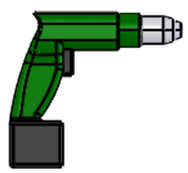

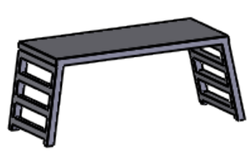

1.

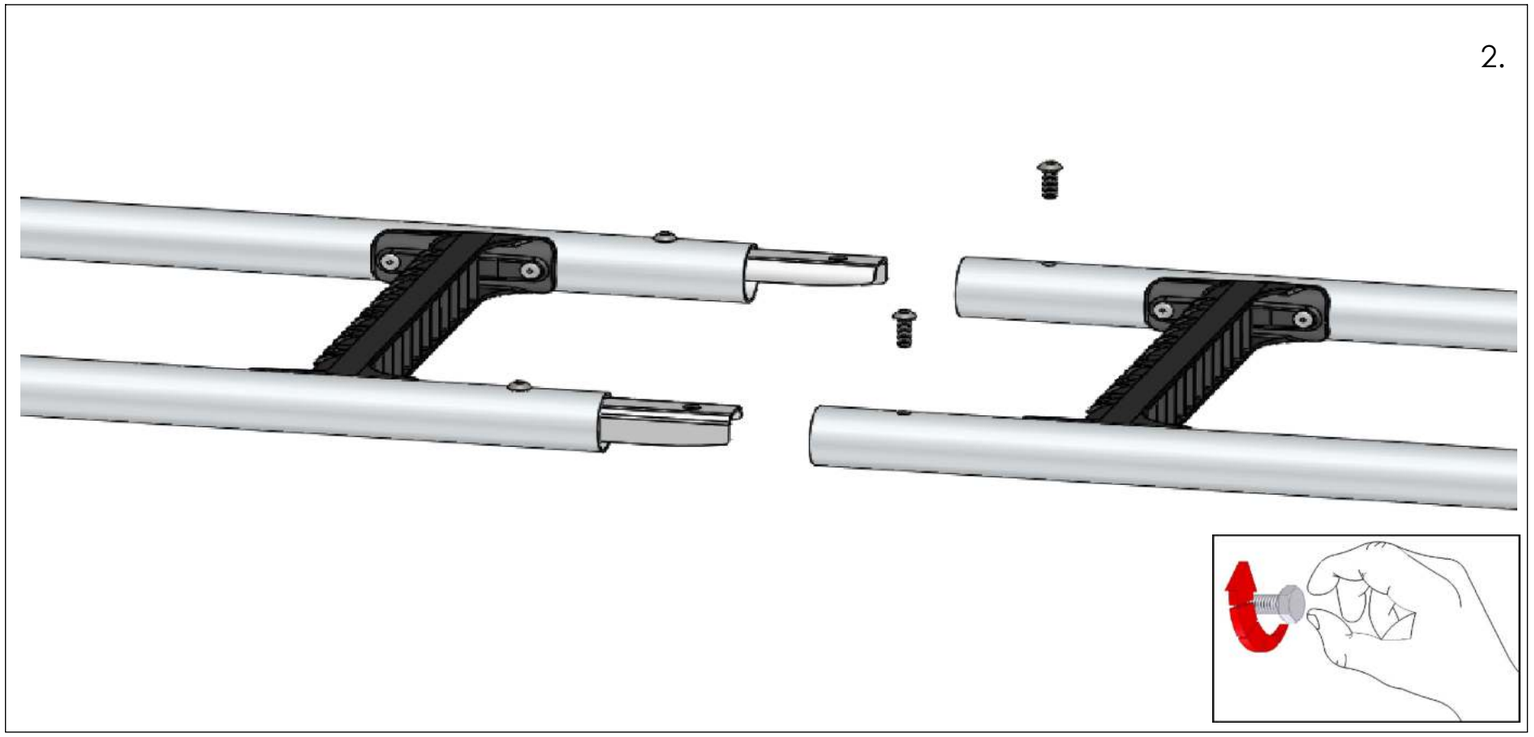
2.

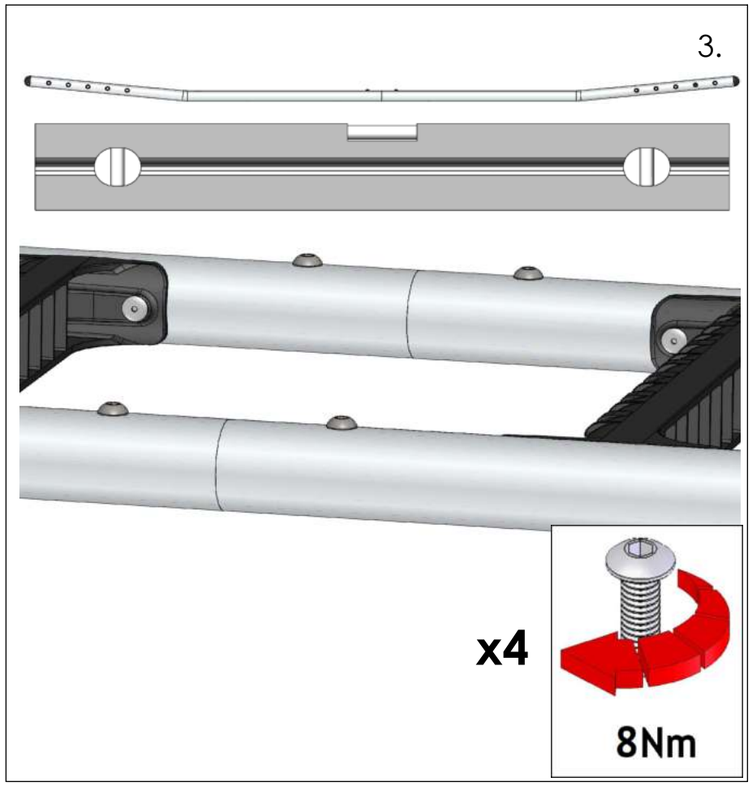
3.
x4
8Nm

4.

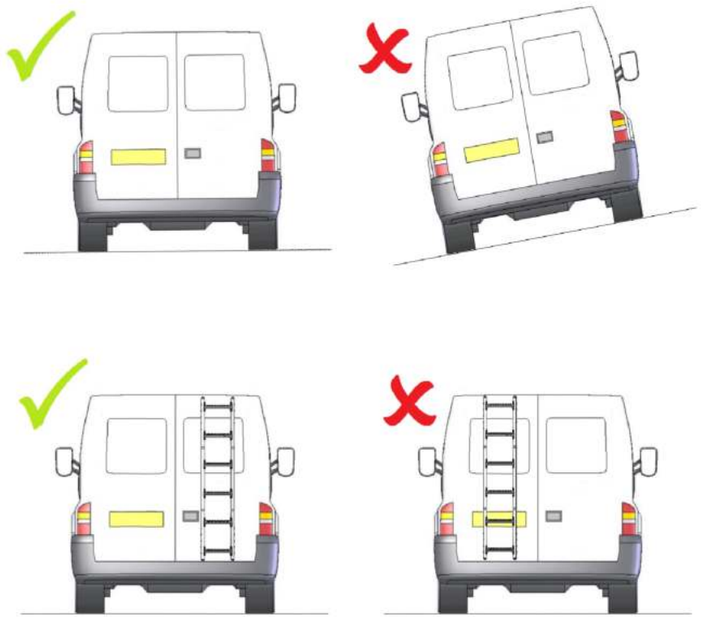

5.

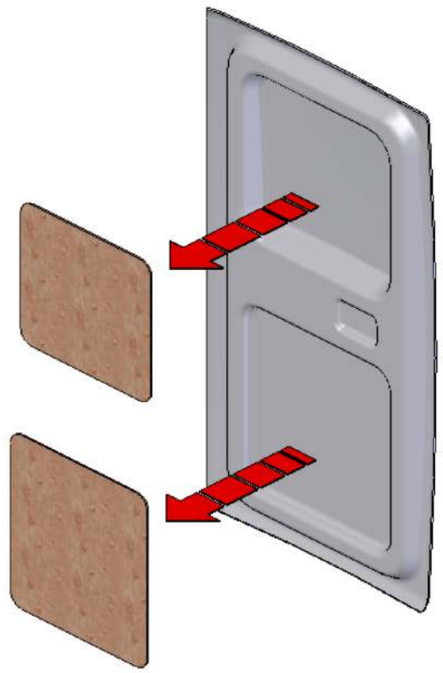

6.

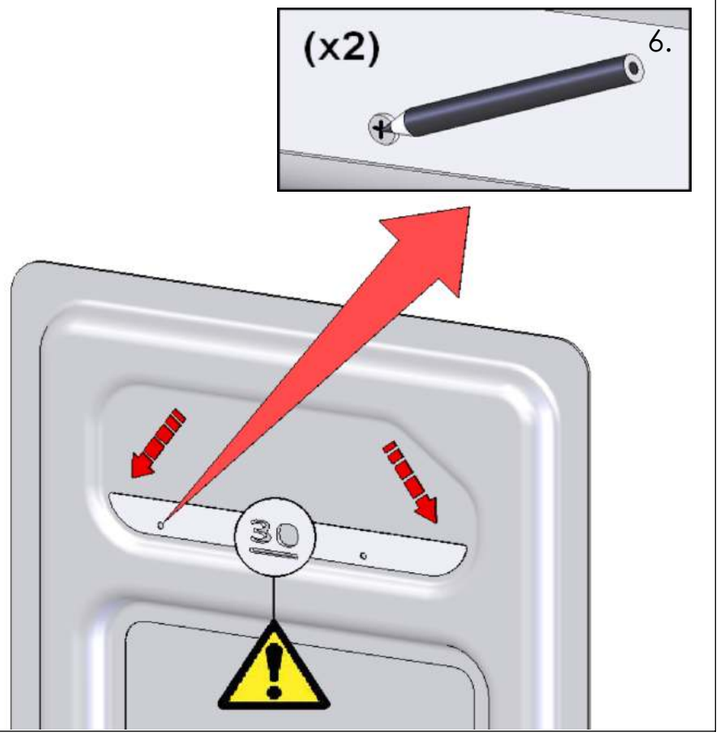

7.

∅4mm (x 2)

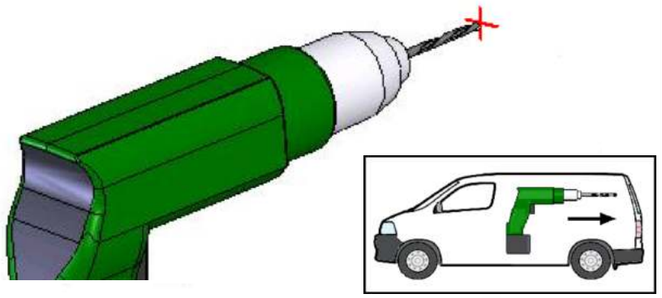

∅9mm (x 2)

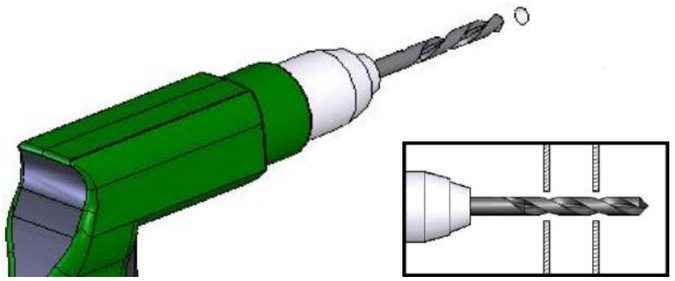

8.

∅13mm (x 2)

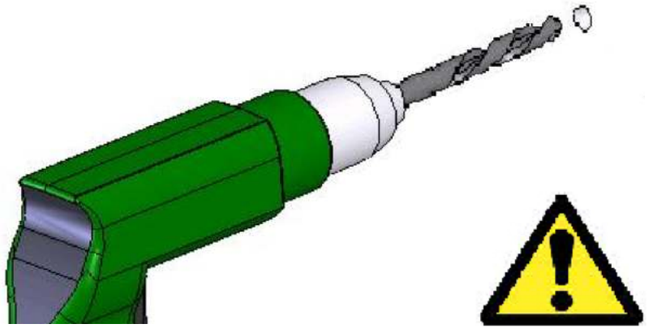

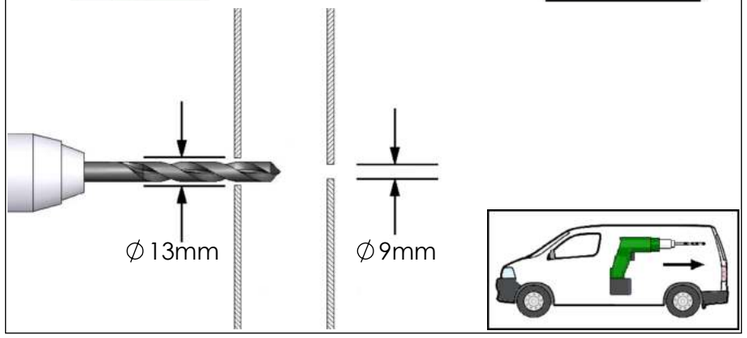

9.

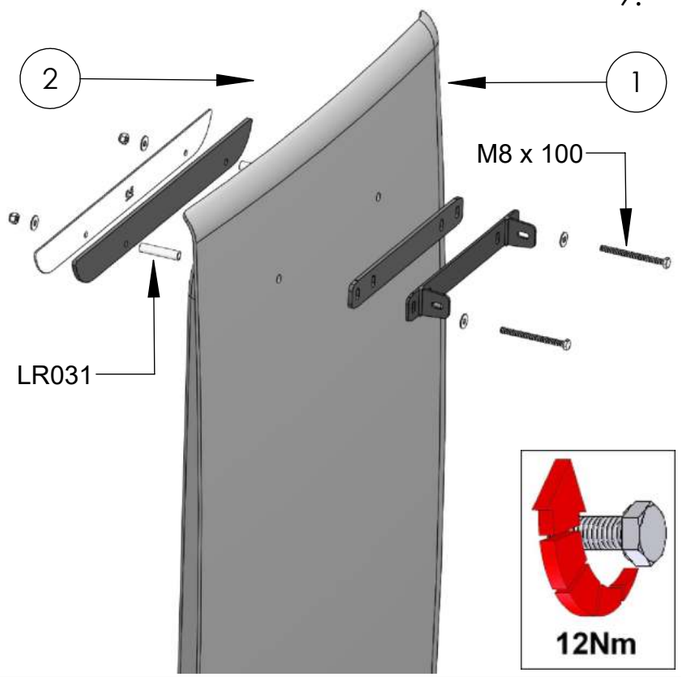

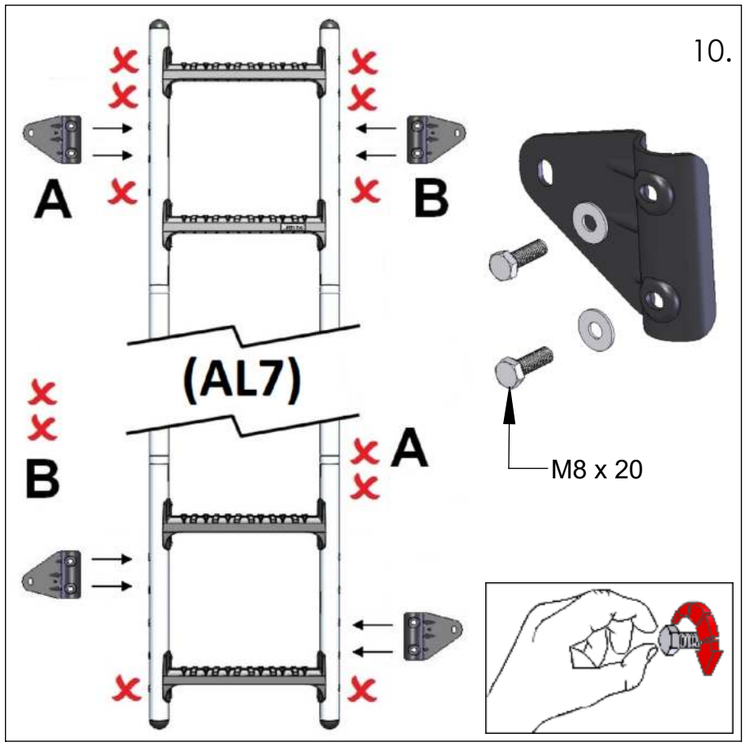
10.
A
B
(AL7)
B
A
M8 x 20

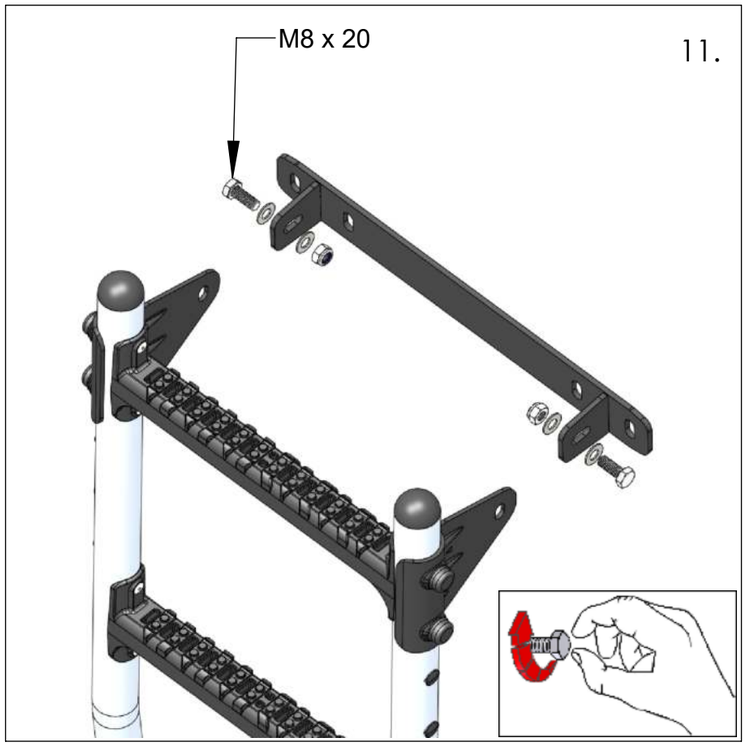
M8 x 20
11.

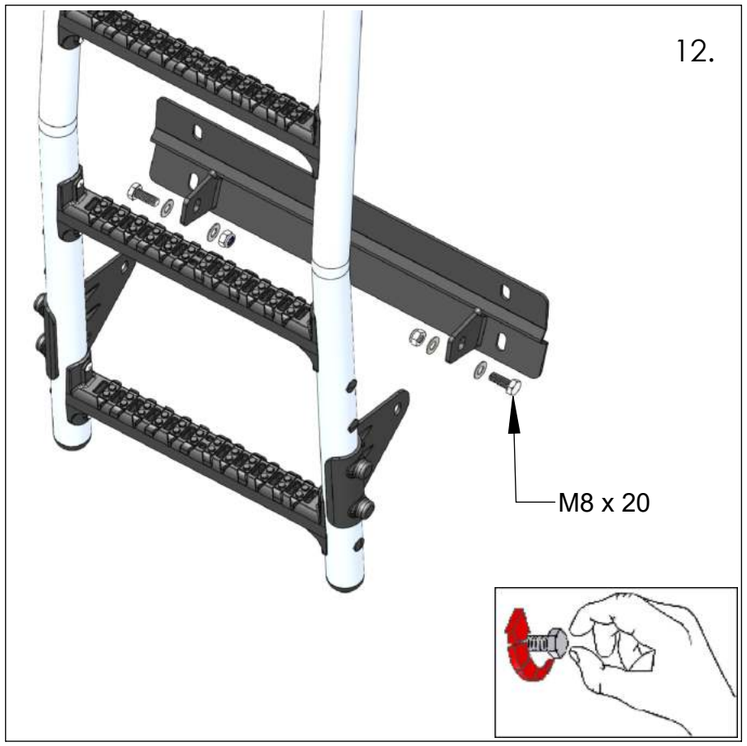
12.
M8 x 20

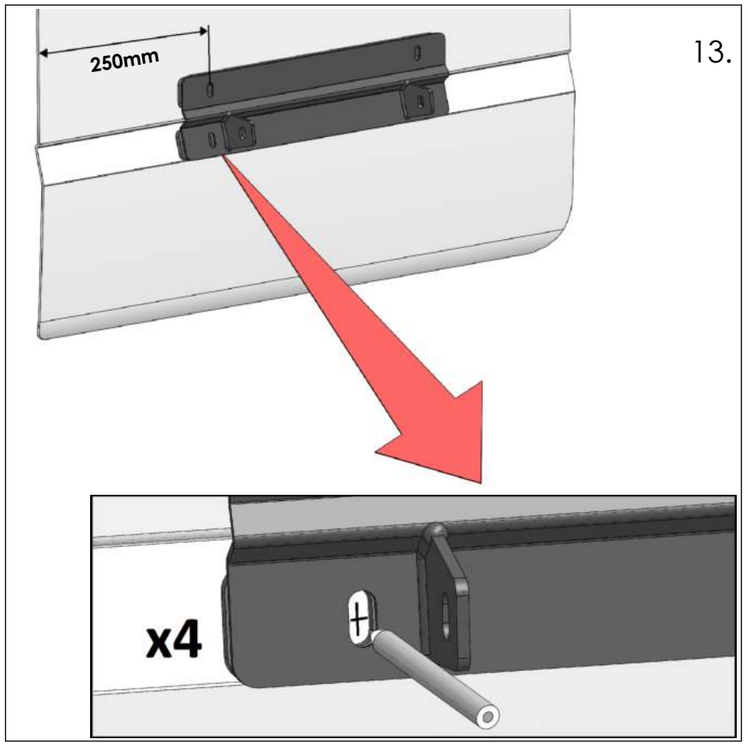
250mm
13.
x4

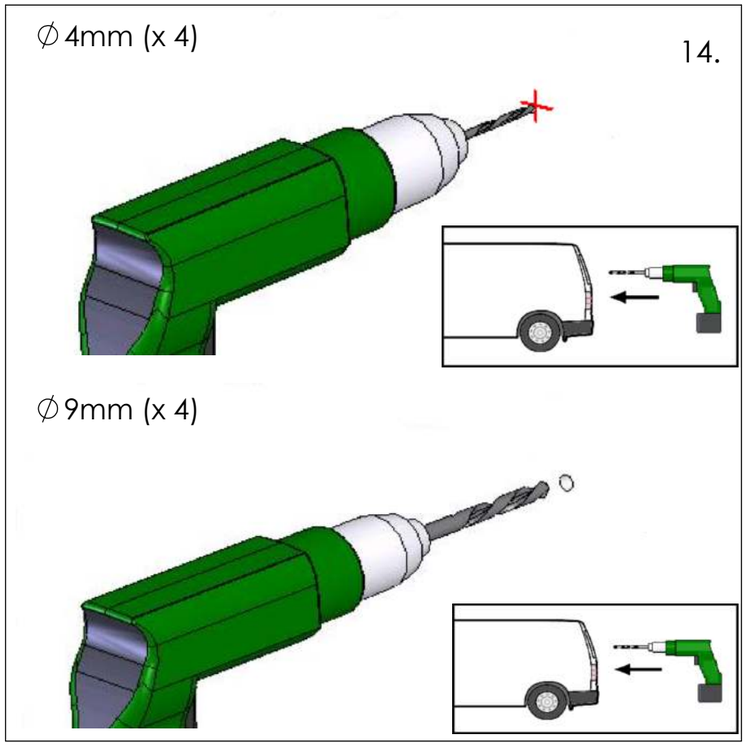
∅4mm (x 4)
14.
∅9mm (x 4)

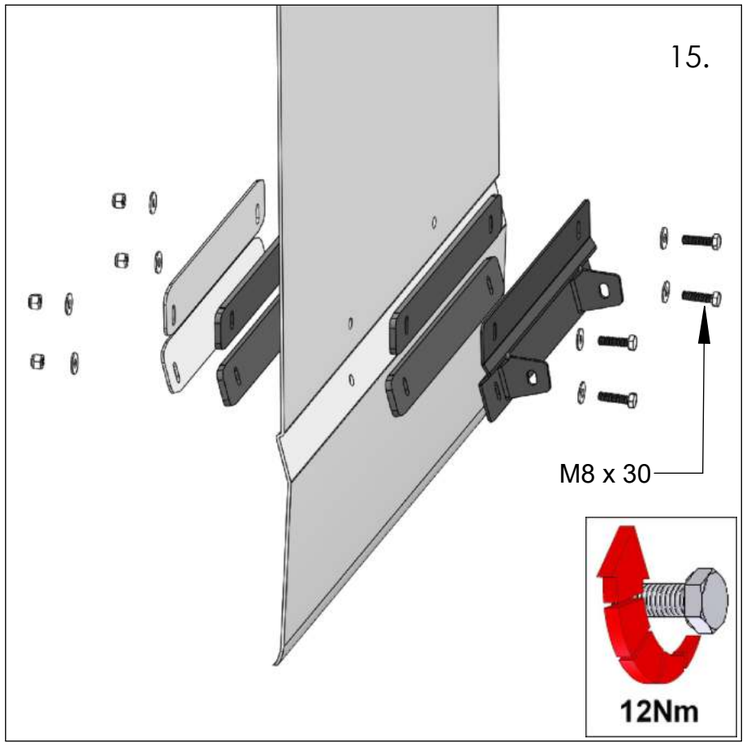
15.
M8 x 30
12Nm

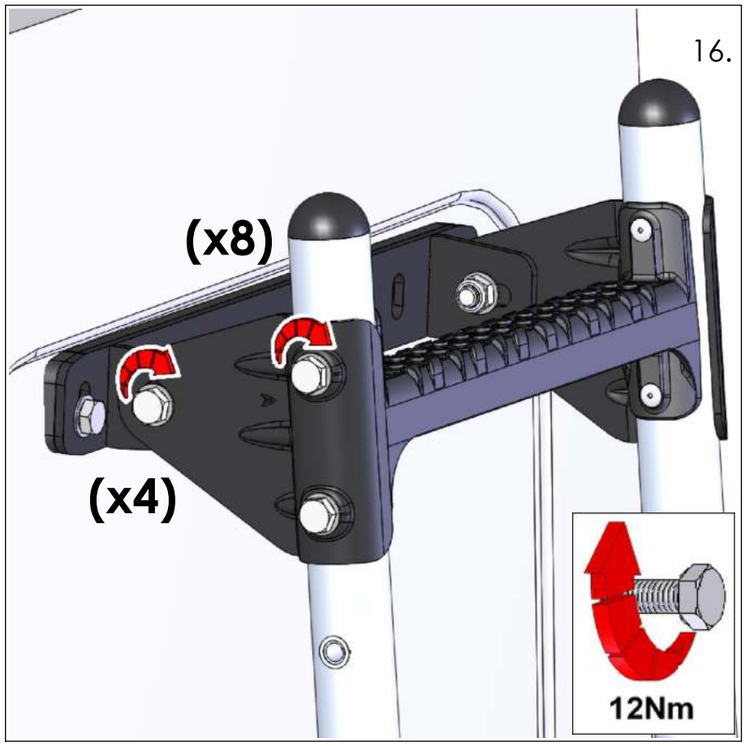
16.
(x8)
(x4)
12Nm

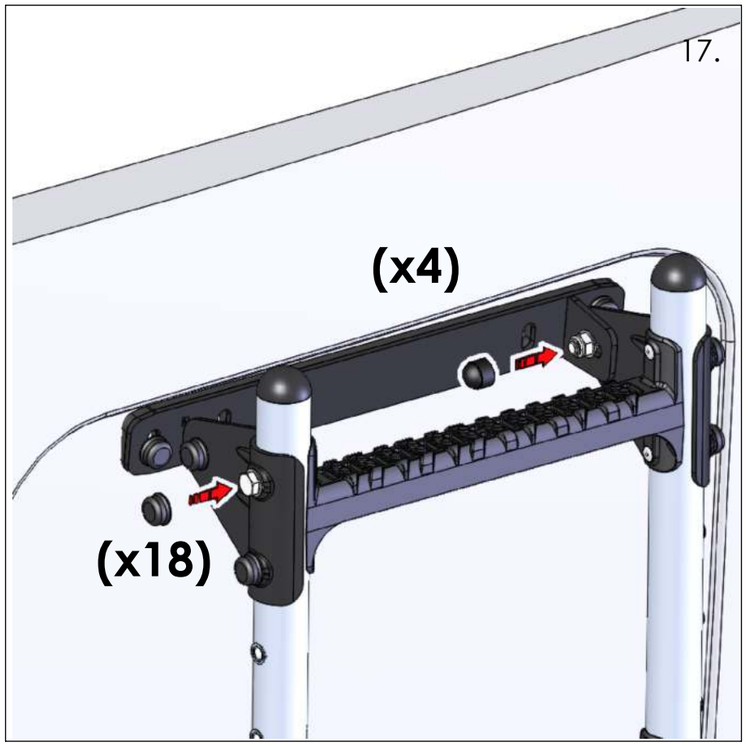
17.
(x4)
(x18)

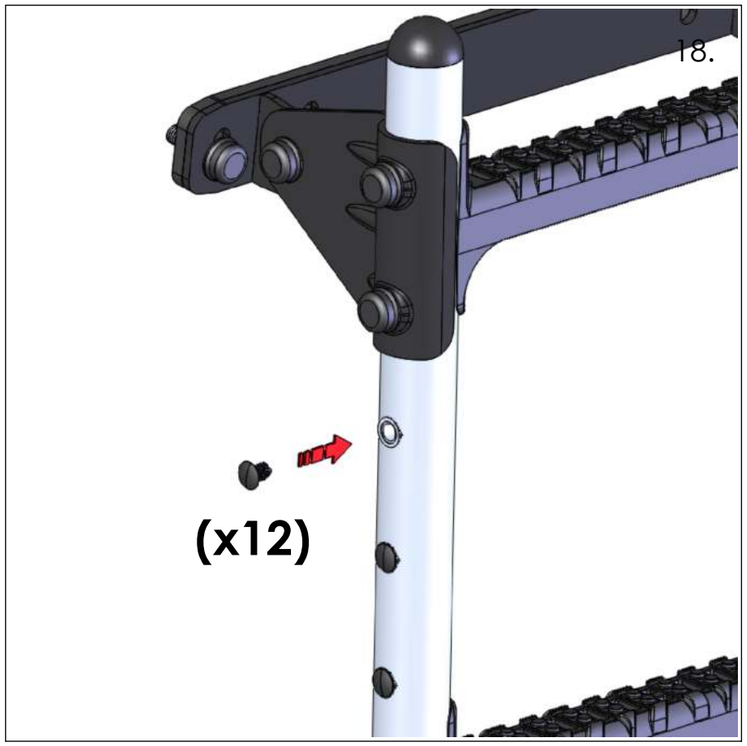
18.
(x12)

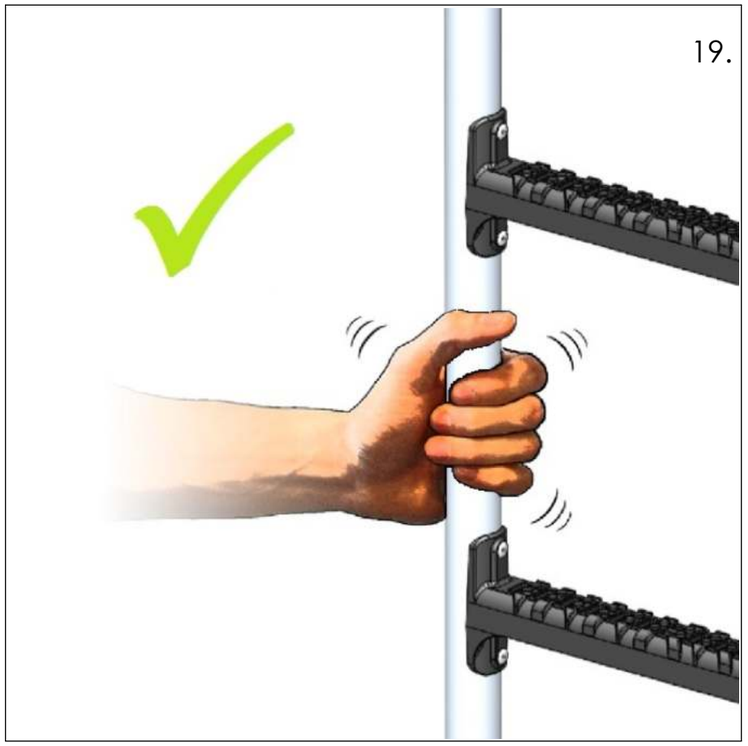
19.