(1:1)

(LW004) x 1

PS054 x 1

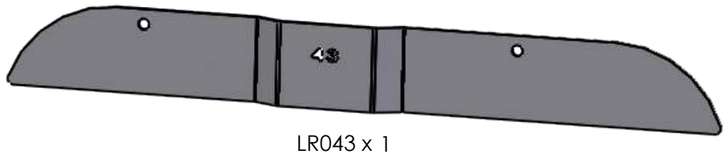
LR043 x 1

(LW010) x 1

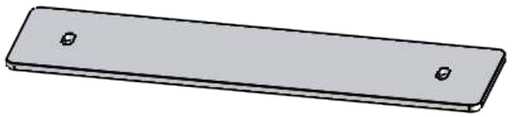
PS093 x 1

LR009 x 1

LR005 x 2

LR006 x 2

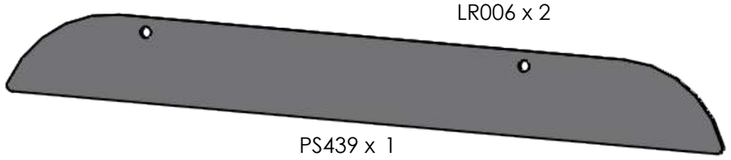
PS439 x 1

PS425 x 1

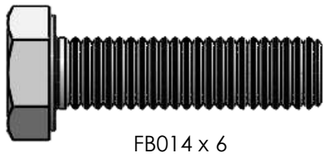
FB014 x 6

FS067 x 12

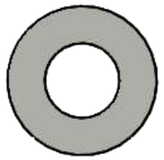
FW021 x 28

FN080 x 10

PS414 x 18

PS065 x 4

PS419 x 12

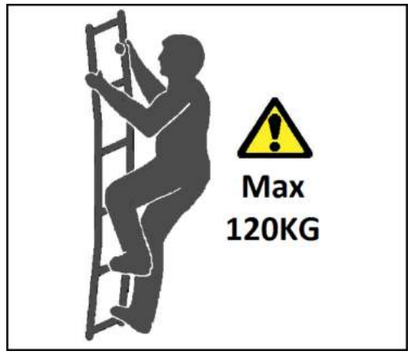

13mm x 2

4mm x 1

9mm x 1

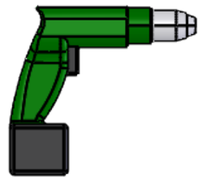

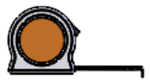

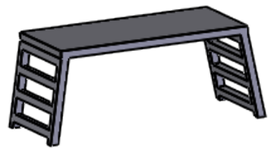

1.

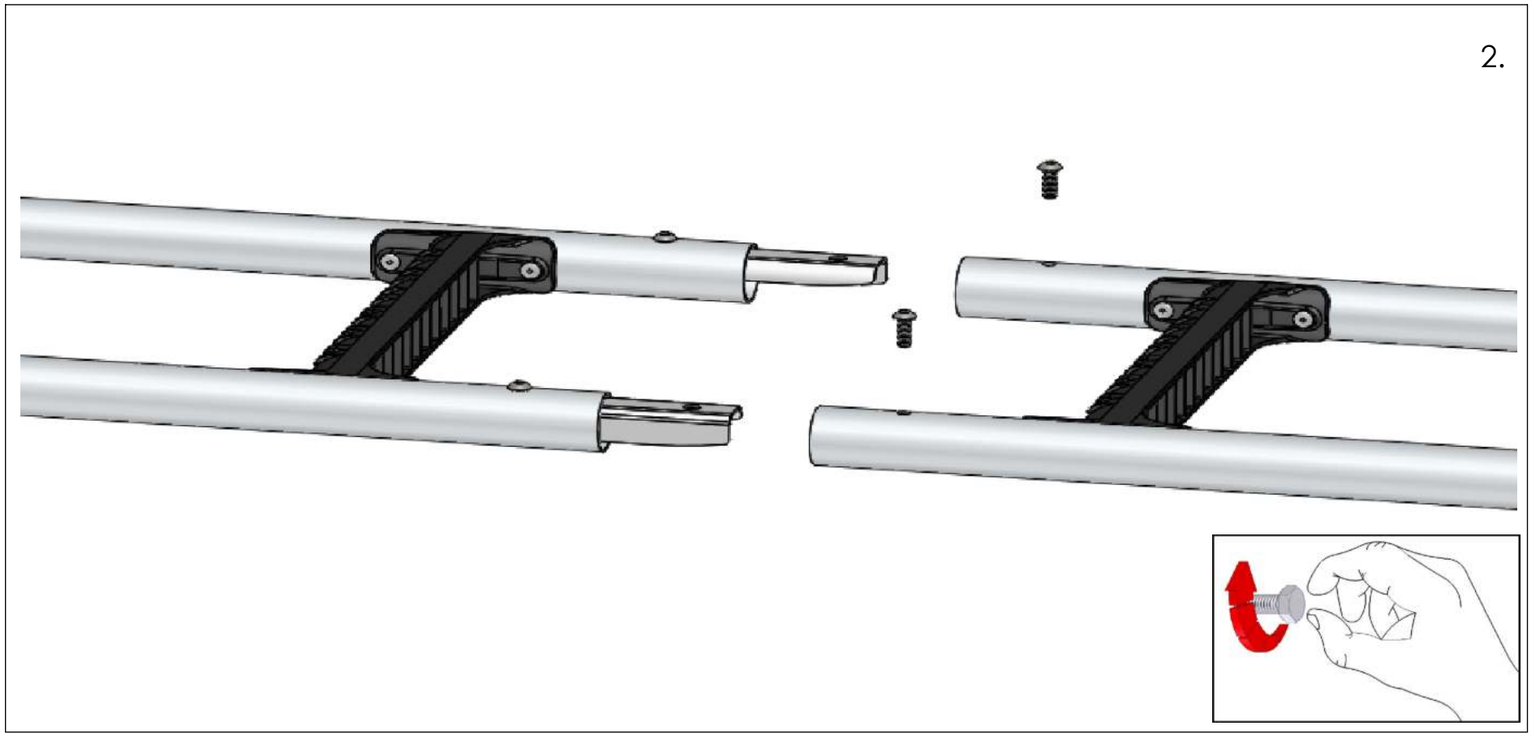
2.

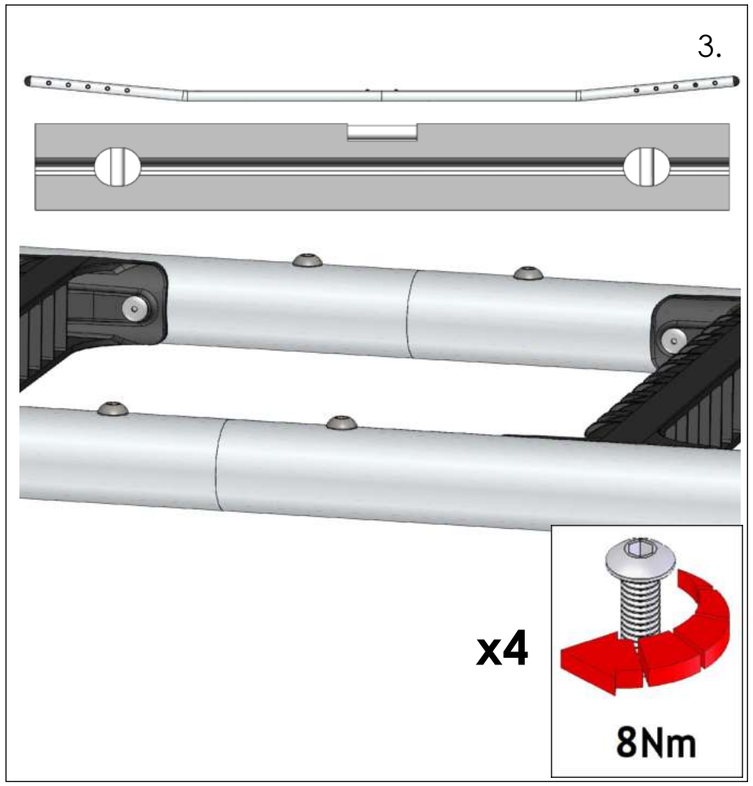
3.
x4
8Nm

4.

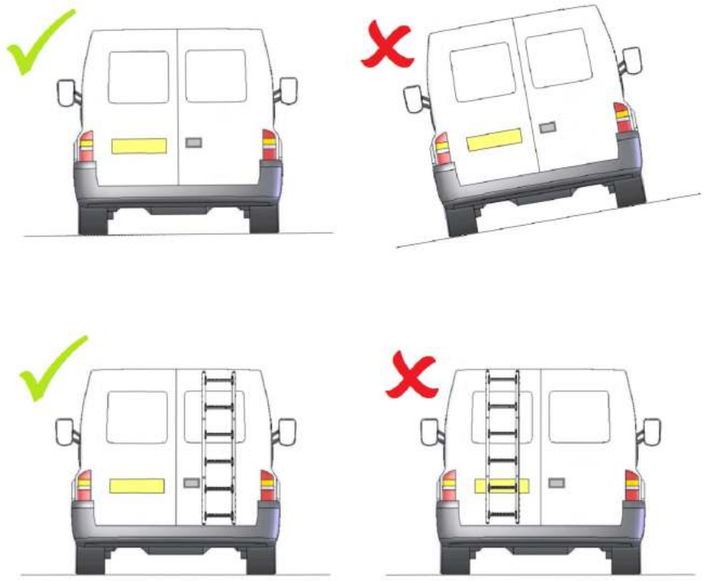

5.

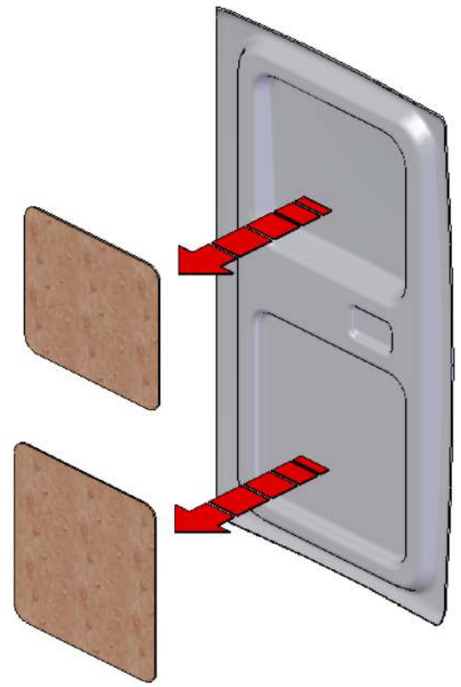

6.

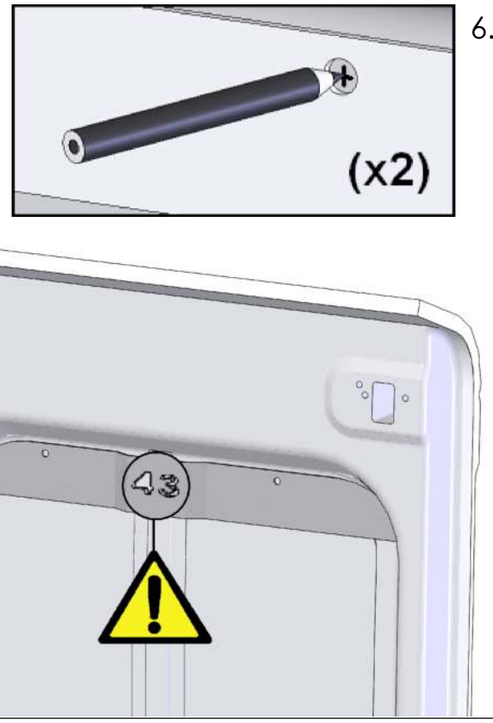

7.

∅4mm (x 2)

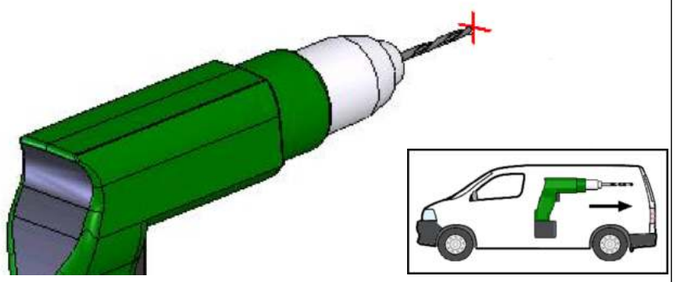

∅9mm (x 2)

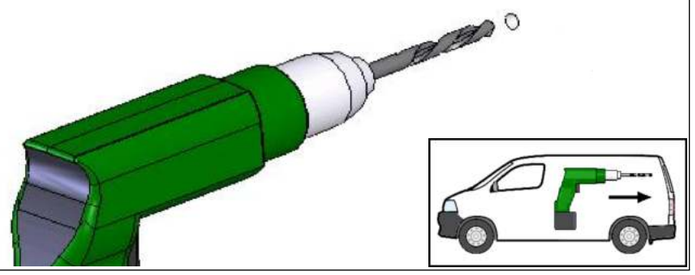

8.

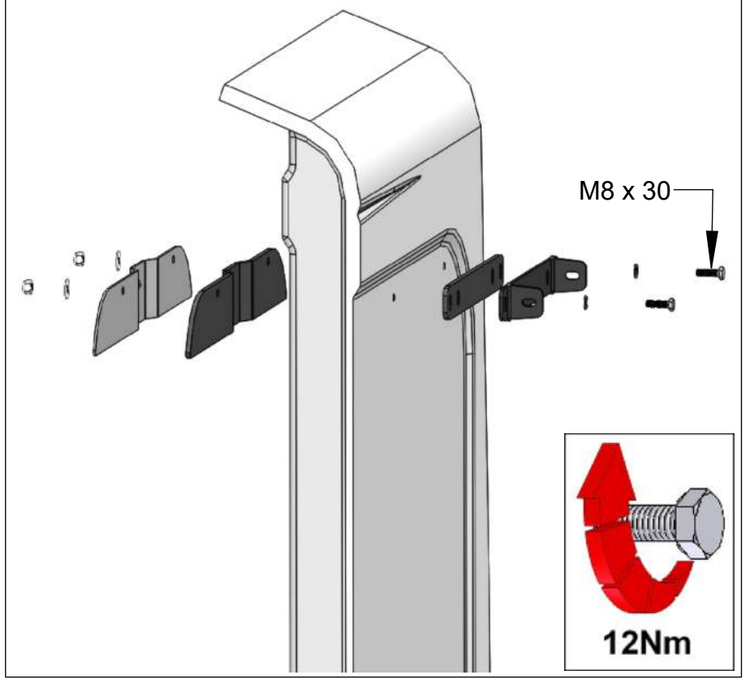

9.

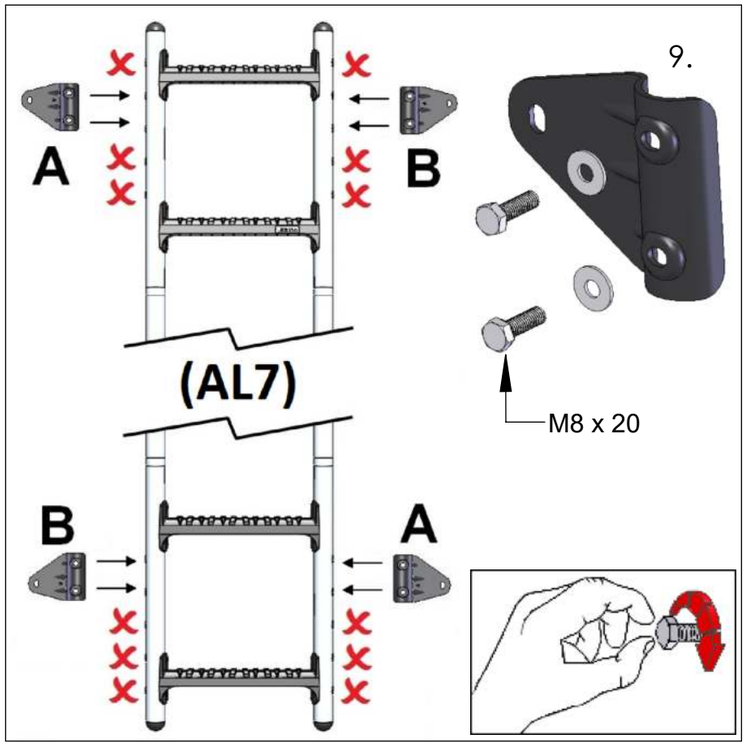

10.

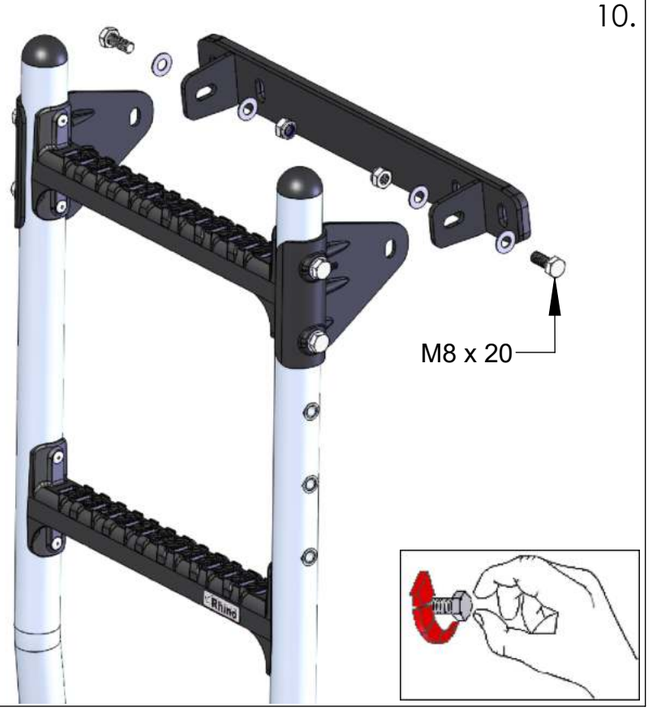

11.

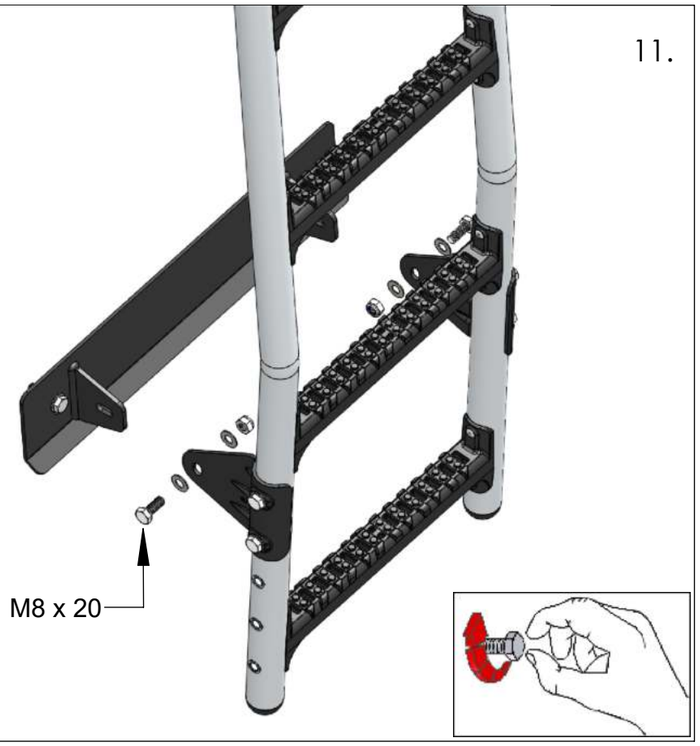

12.

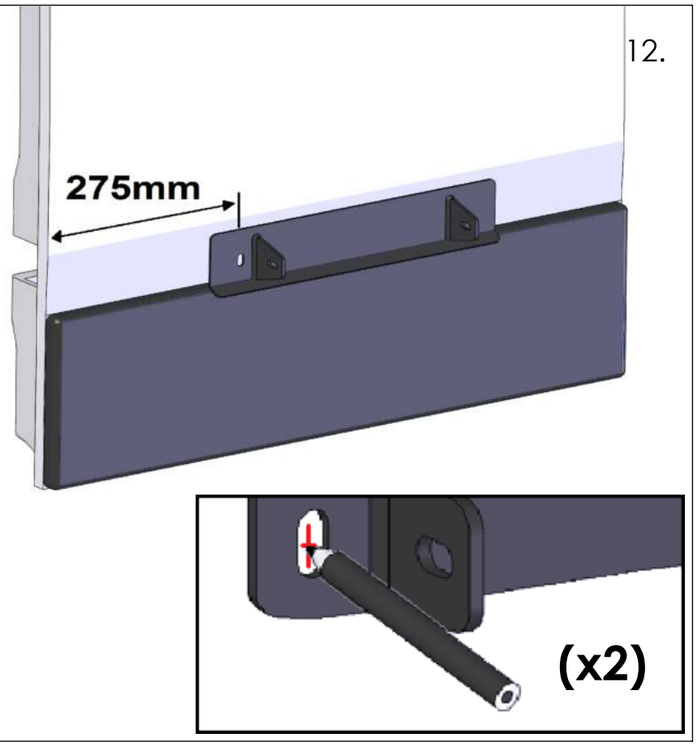

13.

∅4mm (x 4)

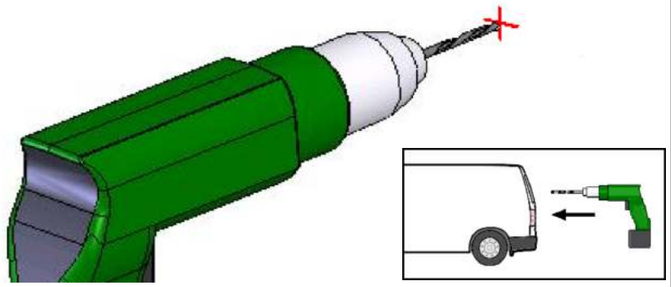

∅9mm (x 4)

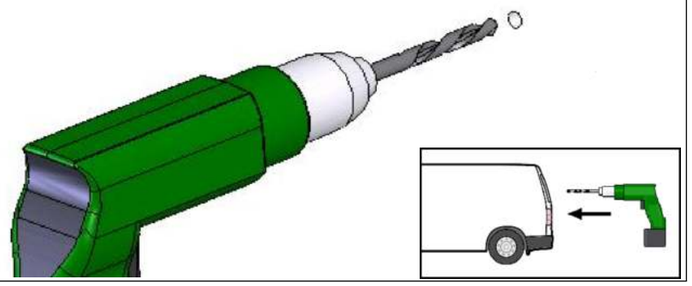

14.

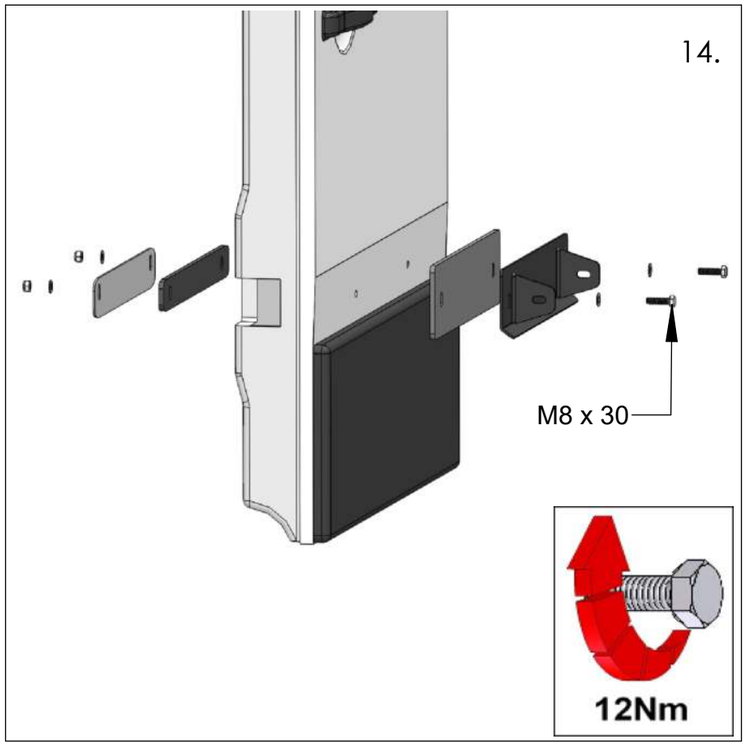

15.

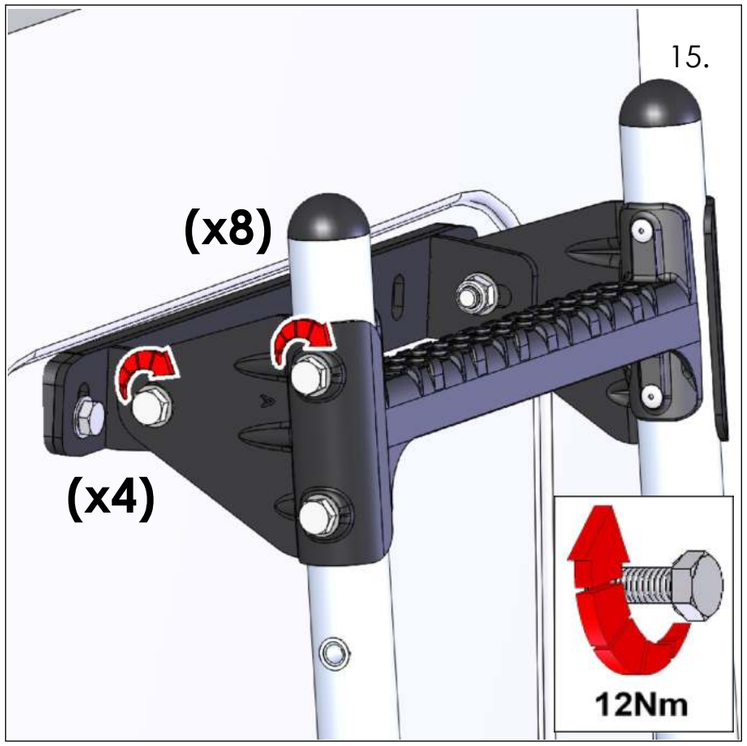

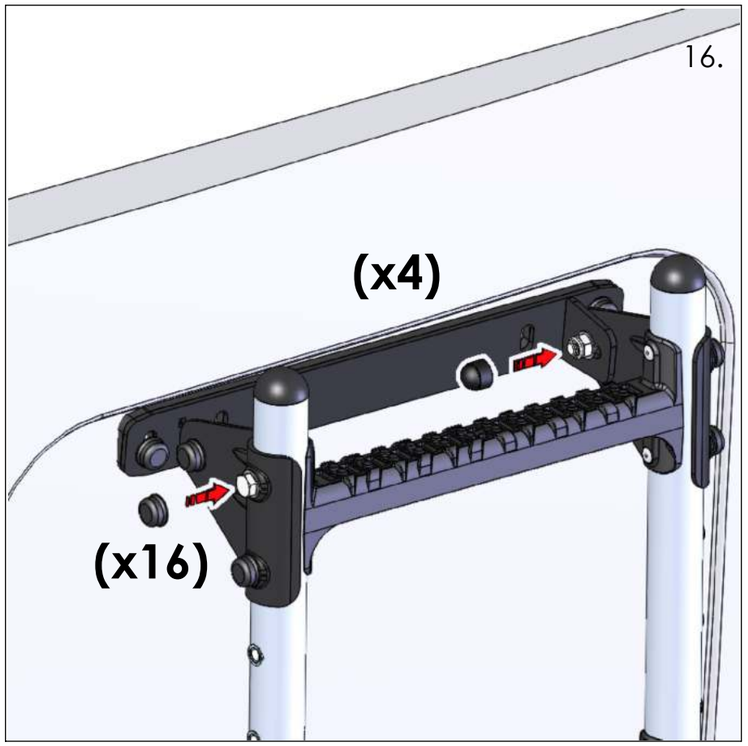
16.
(x4)
(x16)

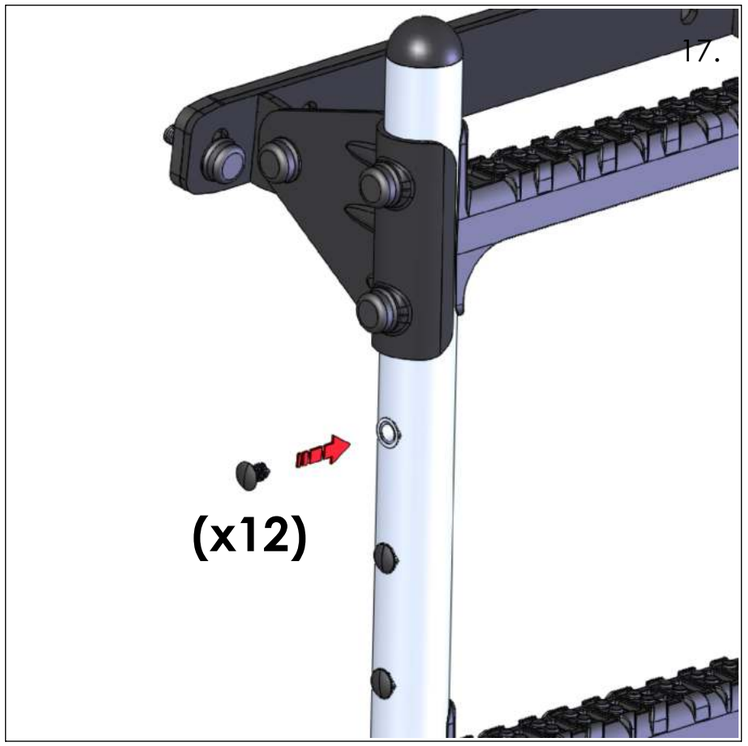
17.
(x12)

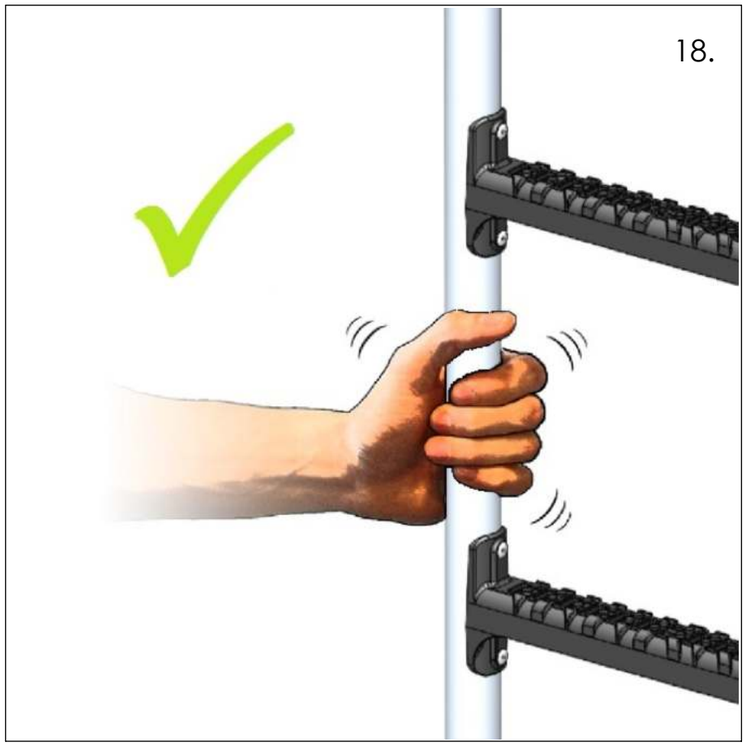
18.