LW004 x 1

PS054 x 1

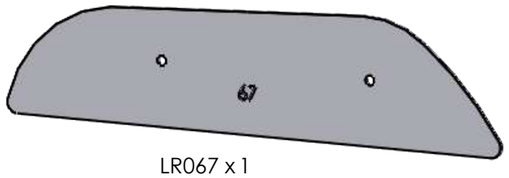

LR067 x 1

(LW020) x 1

PS055 x 1

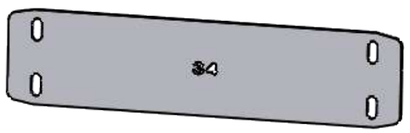

LR034 x 1

LR005 x 2

LR006 x 2

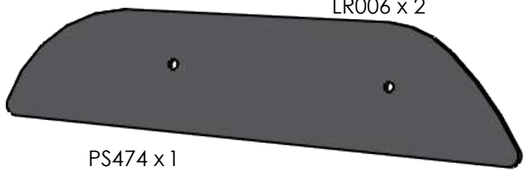

PS474 x 1

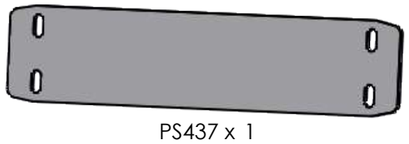

PS437 x 1

(1:1)

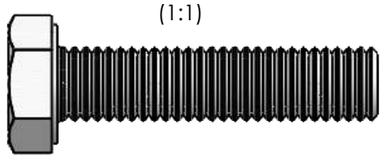

FS061 x 6

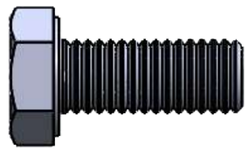

FS067 x 12

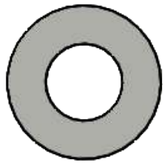

FW021 x 28

FN080 x 10

PS414 x 18

PS065 x 4

PS419 x 12

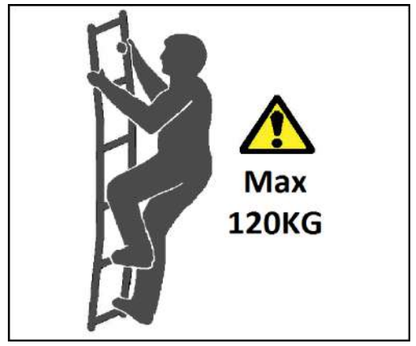

13mm x 2

4mm x 1

9mm x 1

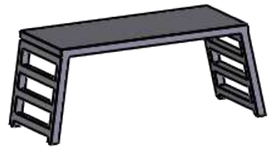

1.

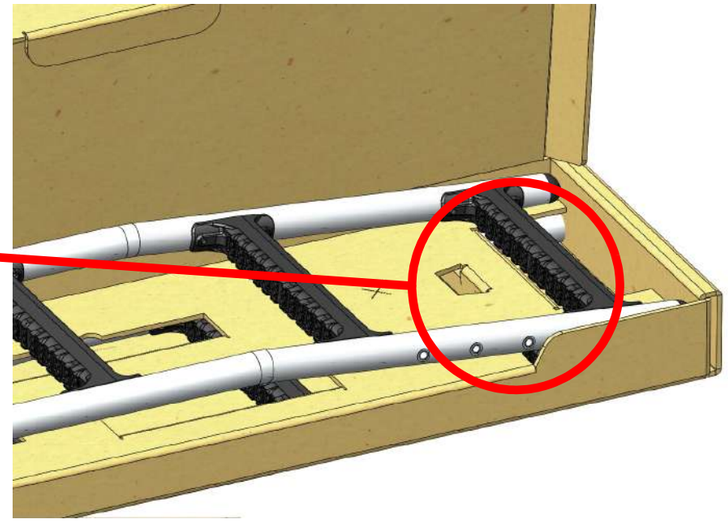

2.

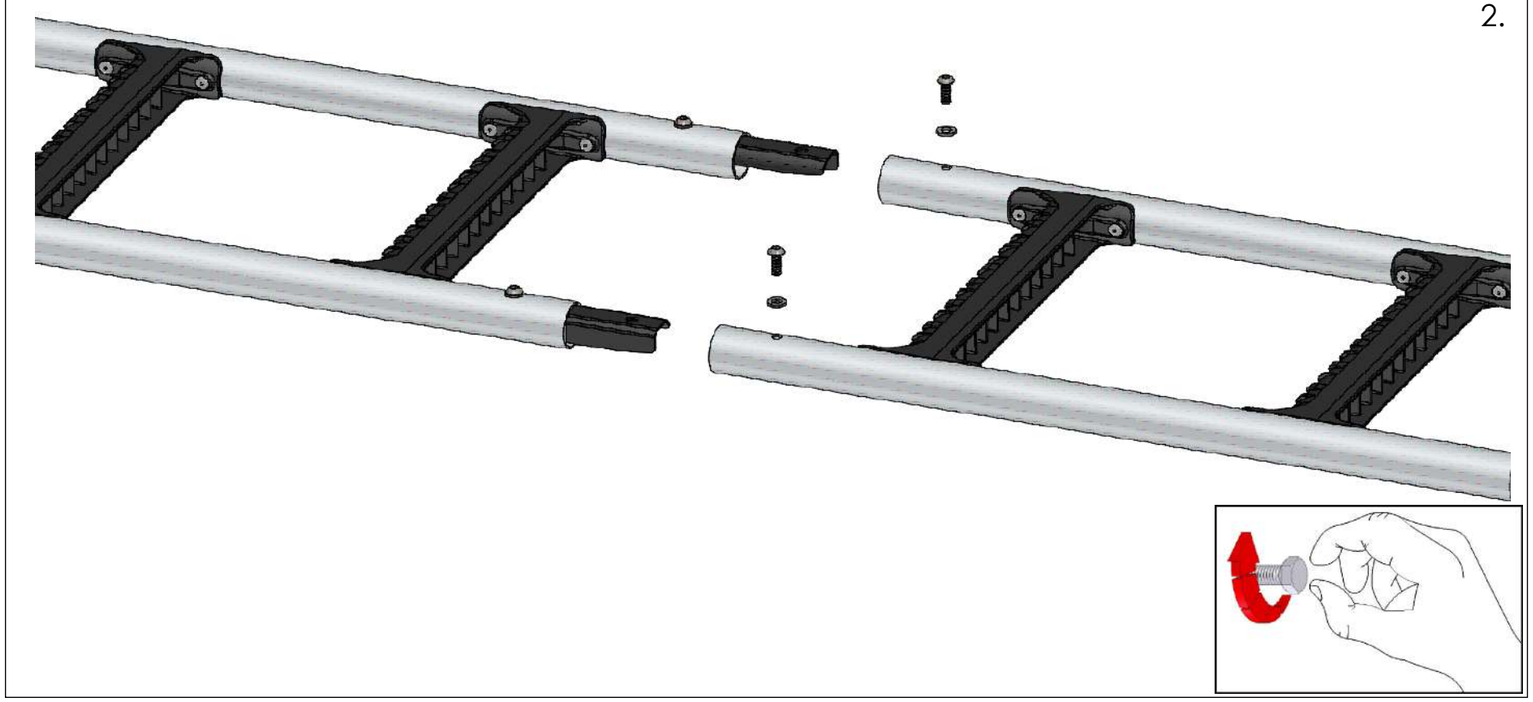

3.

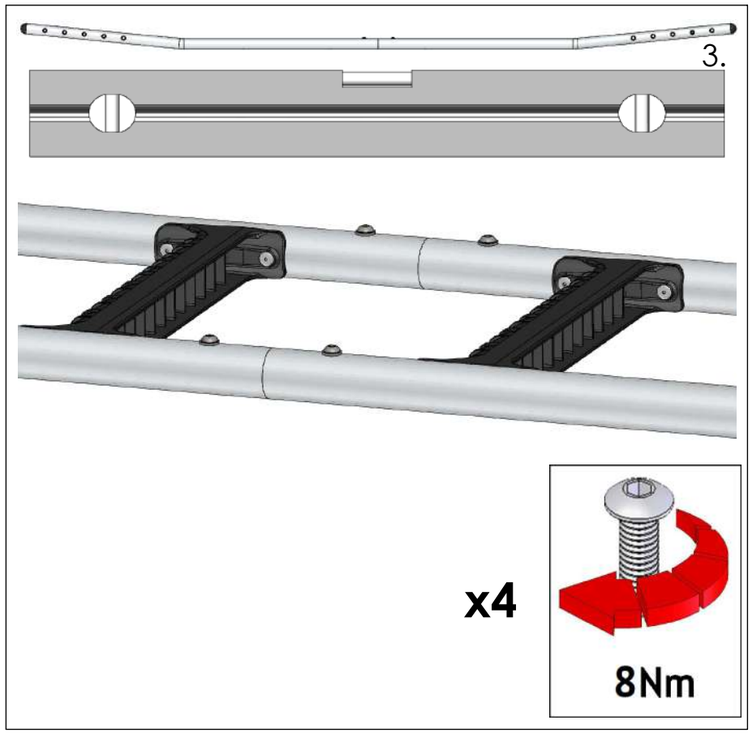

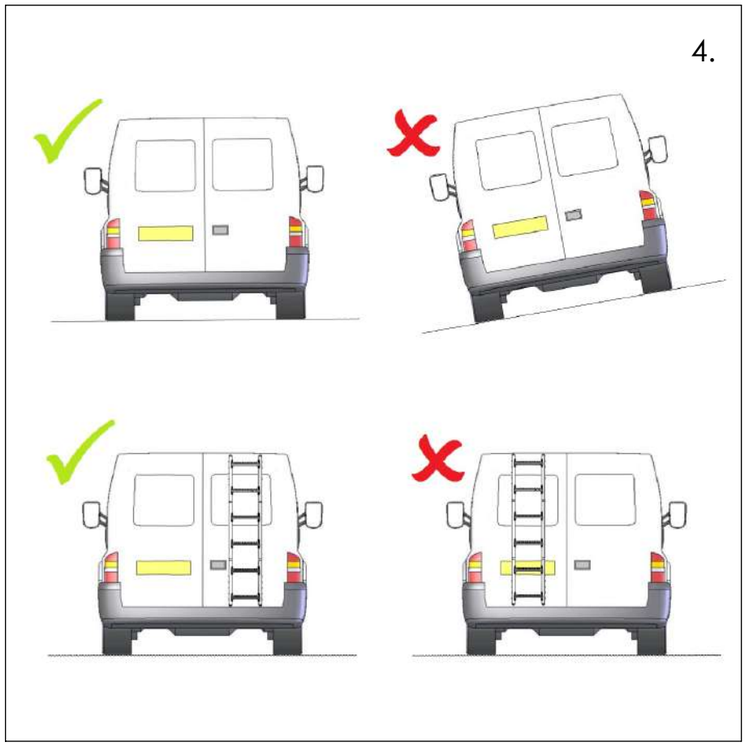
4.

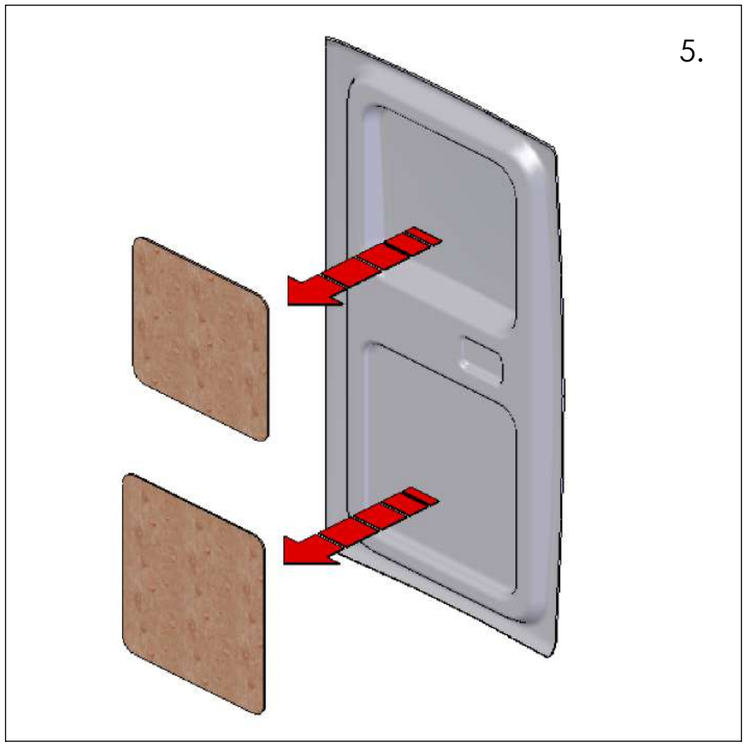
5.

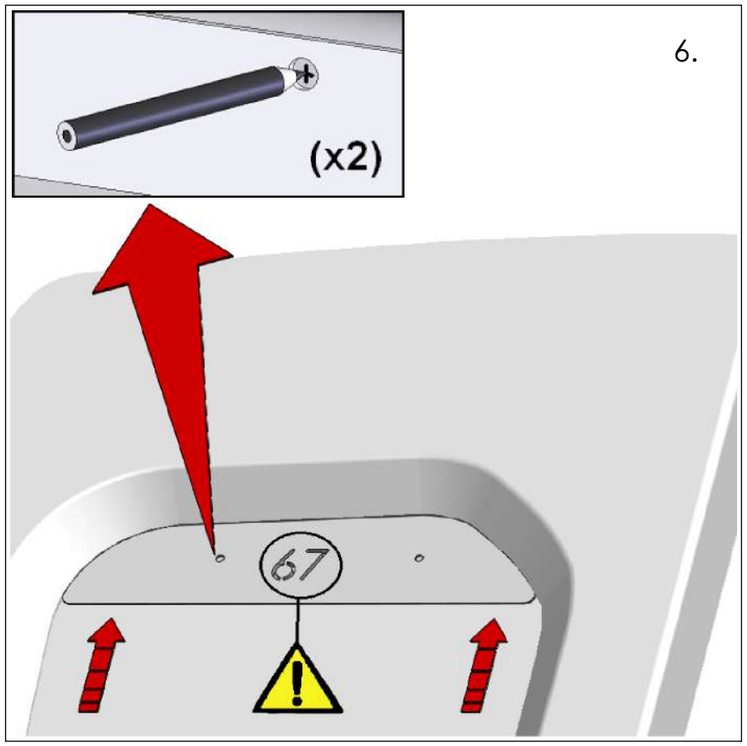
6.
(x2)
67

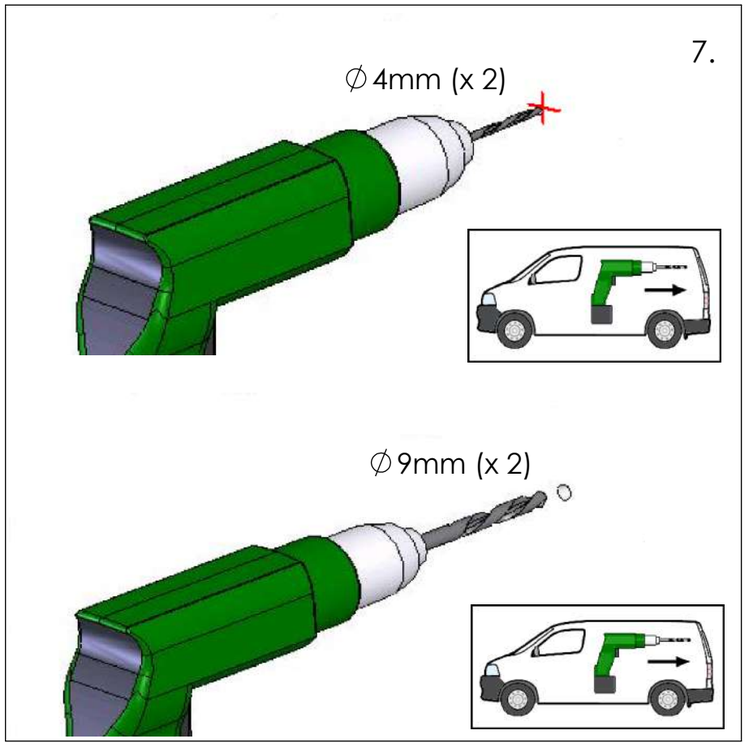
7.
∅4mm (x 2)
∅9mm (x 2)

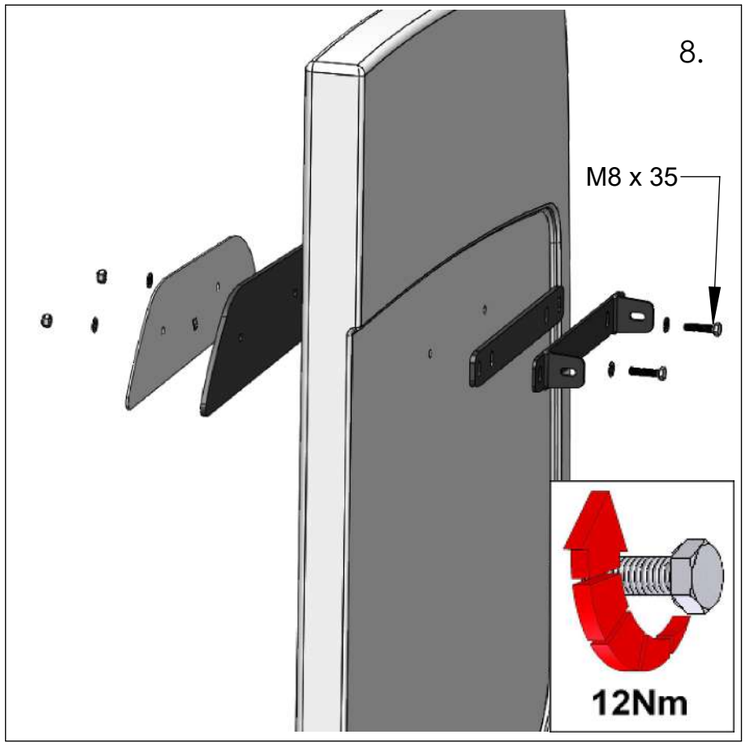
8.
M8 x 35
12Nm

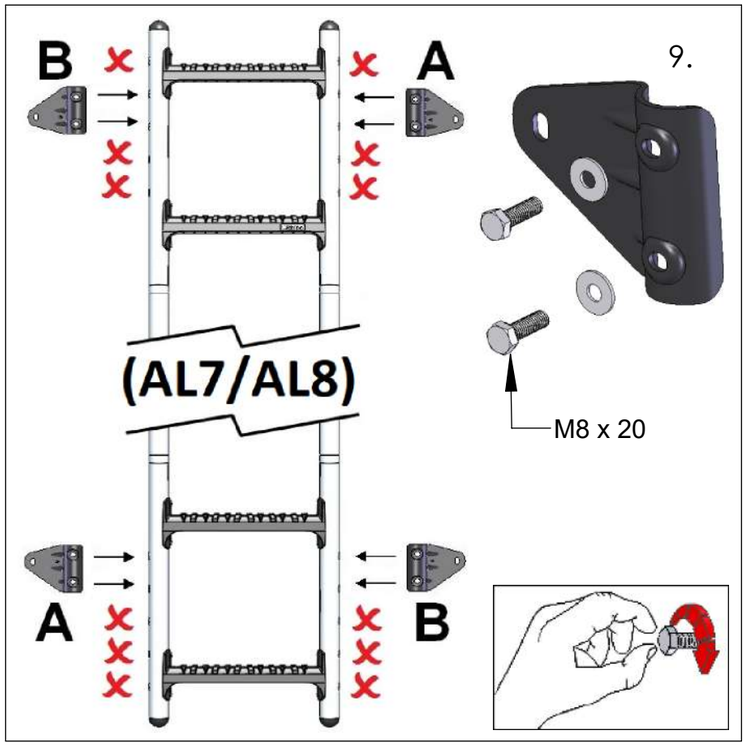
9.
B
A
(AL7/AL8)
M8 x 20
A
B

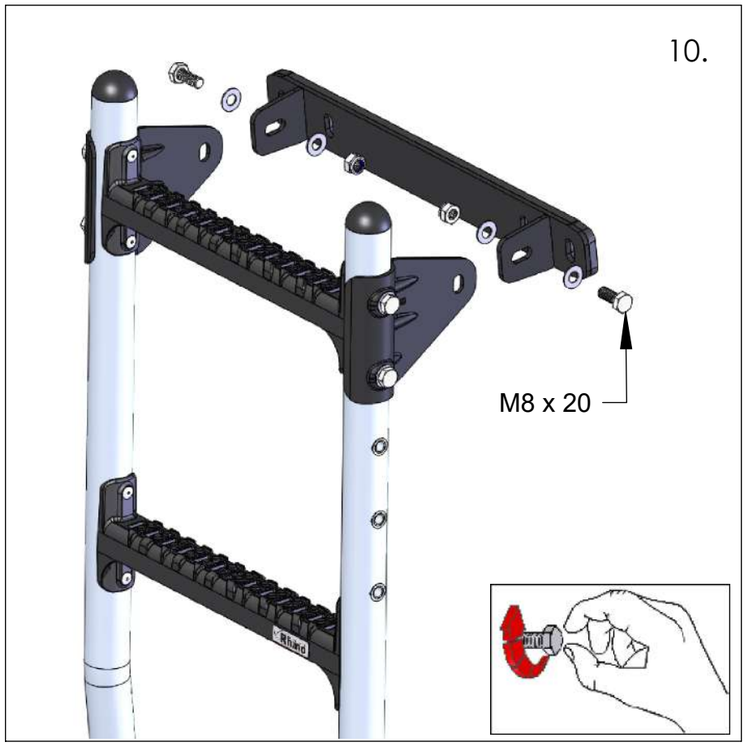
10.
M8 x 20

11.
M8 x 20

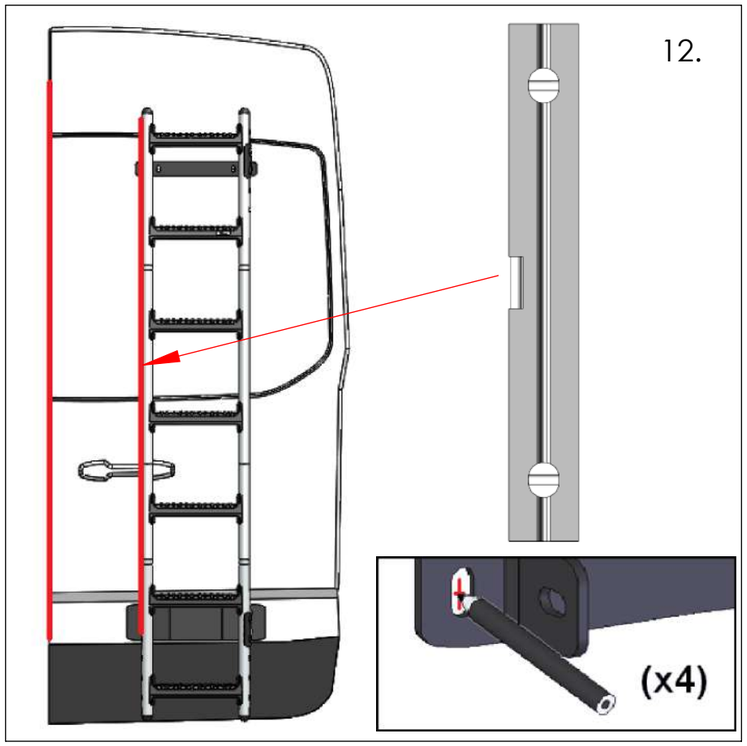
12.
(x4)

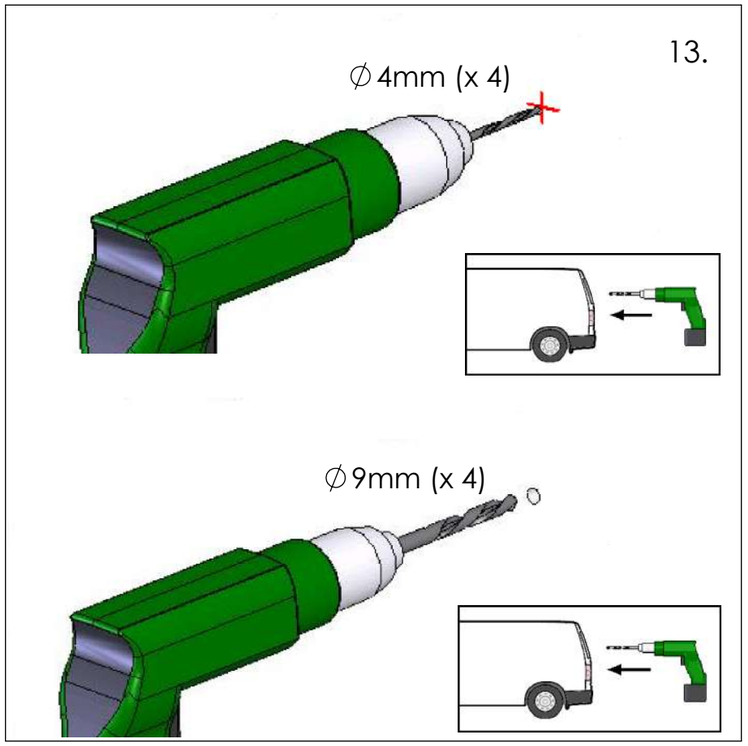
13.
∅4mm (x 4)
∅9mm (x 4)

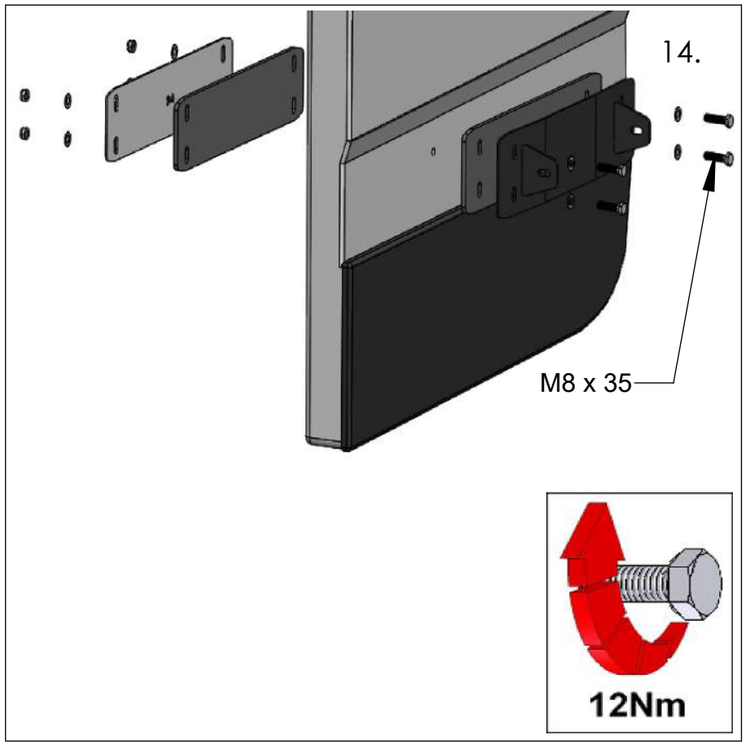
14.
M8 x 35
12Nm

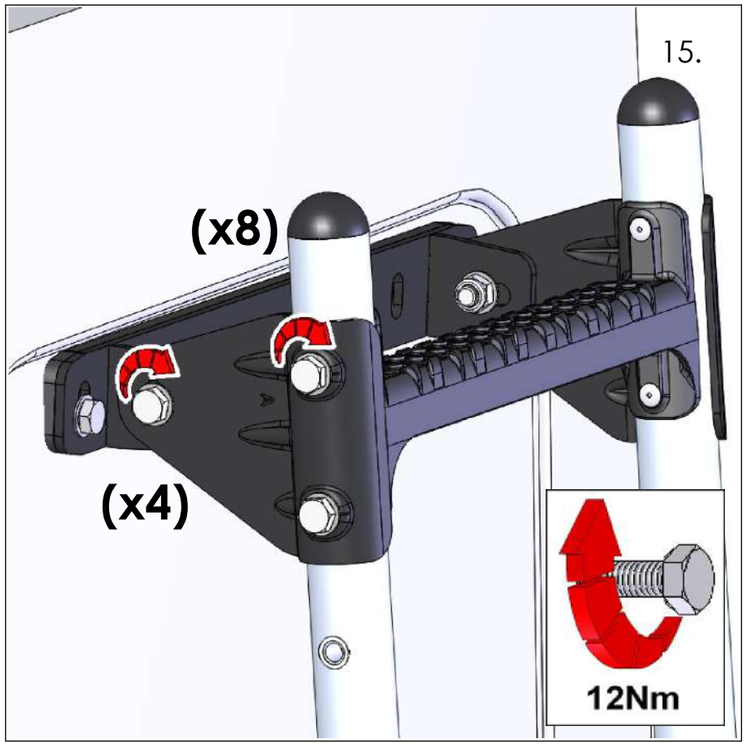
15.
(x8)
(x4)
12Nm

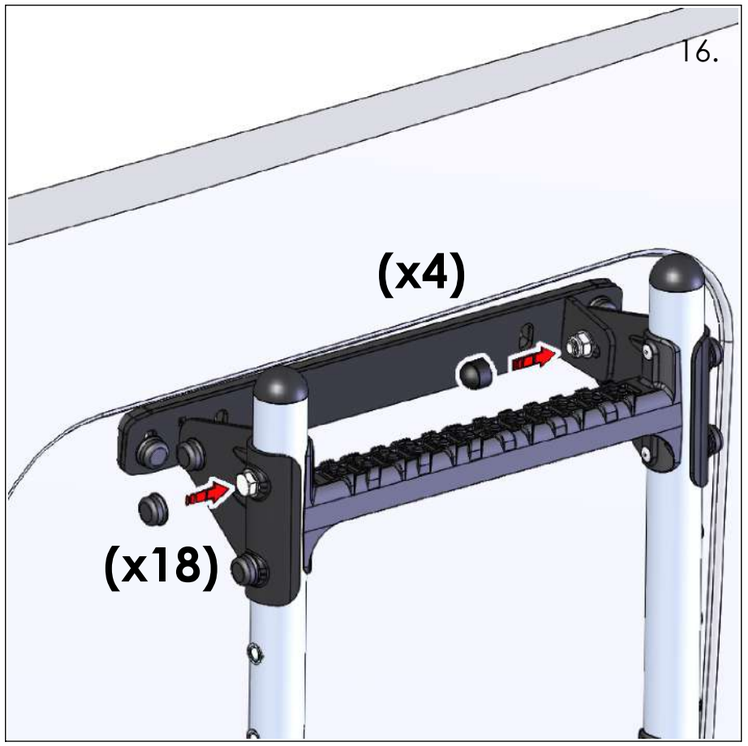
16.
(x4)
(x18)

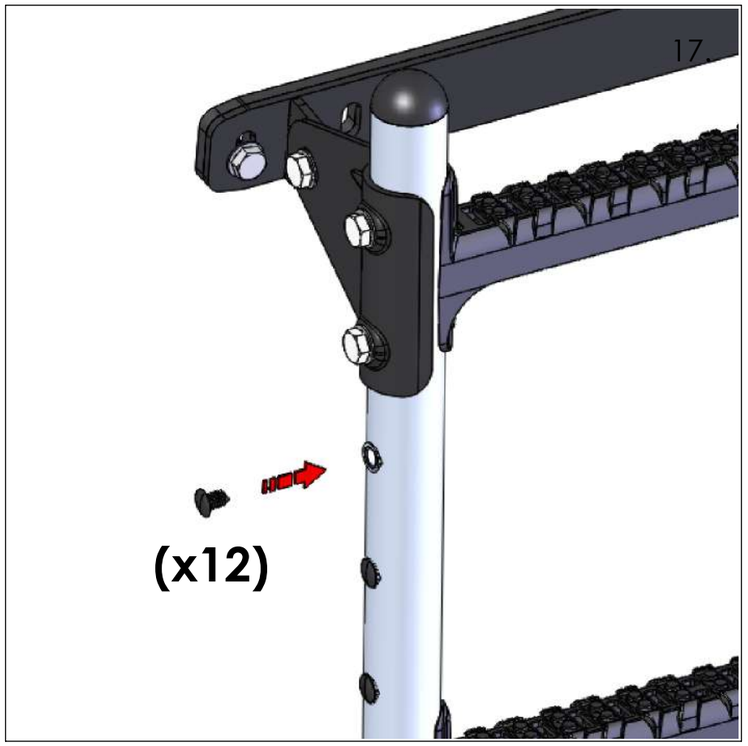
17.
(x12)

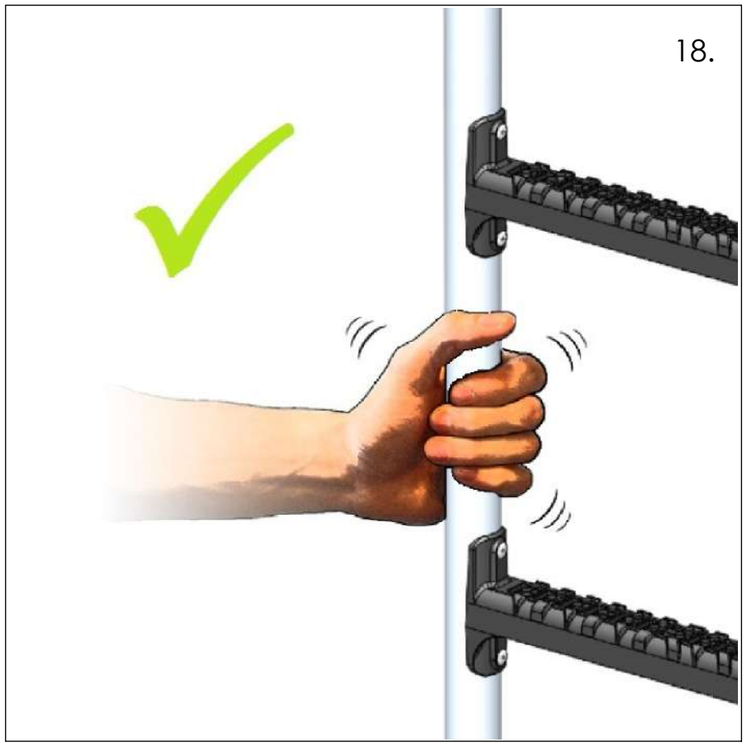
18.